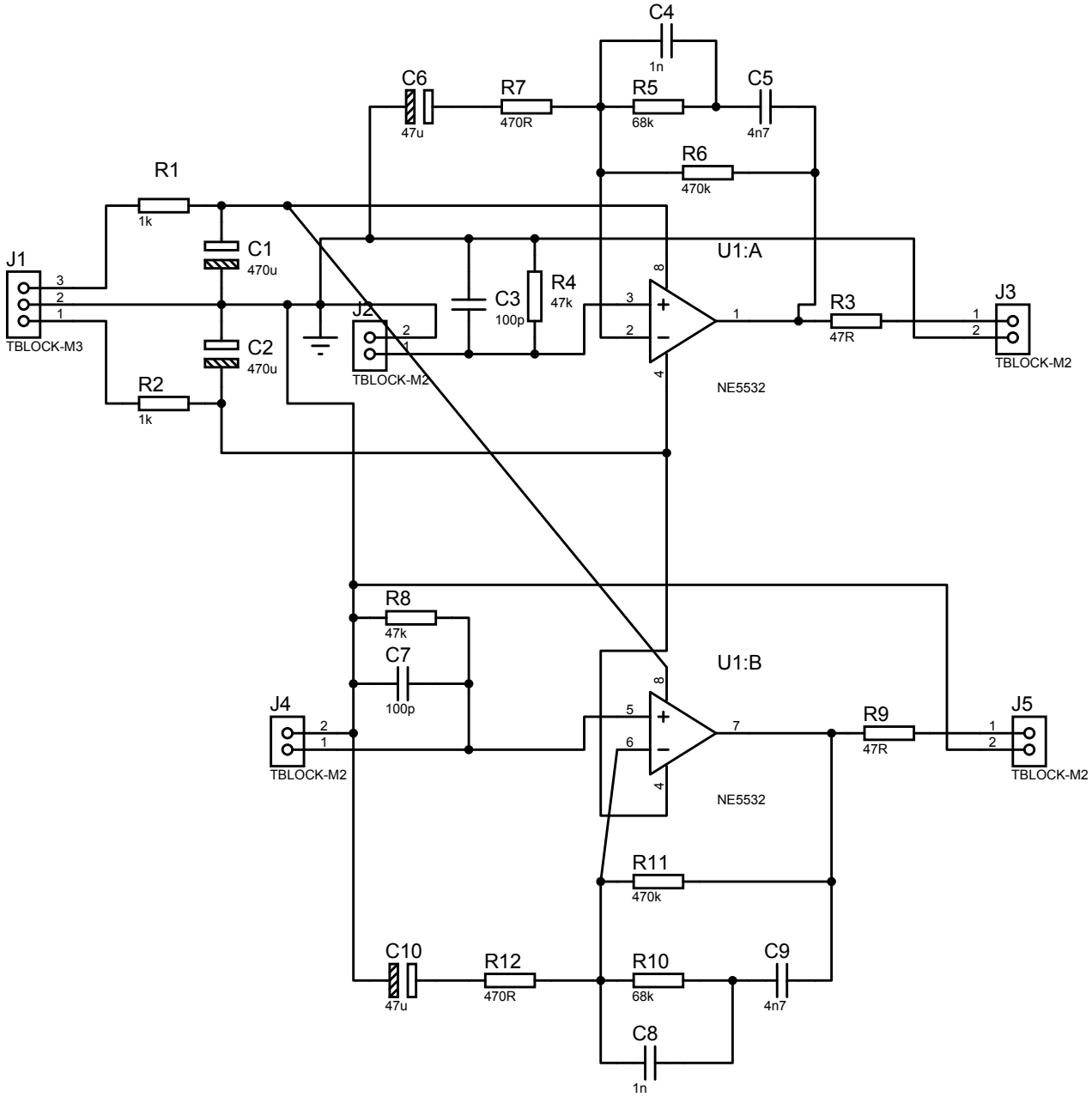
C4
1n
C6
47u
R7
470R
R5
68k
C5
4n7
R6
470k
R1
1k
C1
470u
J1
TBLOCK-M3
C2
470u
R2
1k
J2
TBLOCK-M2
C3
100p
R4
47k
U1:A
NE5532
R3
47R
J3
TBLOCK-M2
R8
47k
C7
100p
J4
TBLOCK-M2
U1:B
NE5532
R9
47R
J5
TBLOCK-M2
R11
470k
C10
47u
R12
470R
R10
68k
C9
4n7
C8
1n